DOOR NUMBER	QTY	OPENING		ACTUAL		MODEL	JAMB			MOUNTING		LOCK	PANELS WIDE	PANELS HIGH	SECTION NUMBER OPEN FOR GLASS							
		WIDTH	HEIGHT	WIDTH	HEIGHT		W	S	M	ANGLE	BRKT				1	2	3	4	5	6	7	8

JOB:

DISTR:

CONTR:

ARCH:

RAYNOR

NR:2902522

STEEL FORM STANDARD

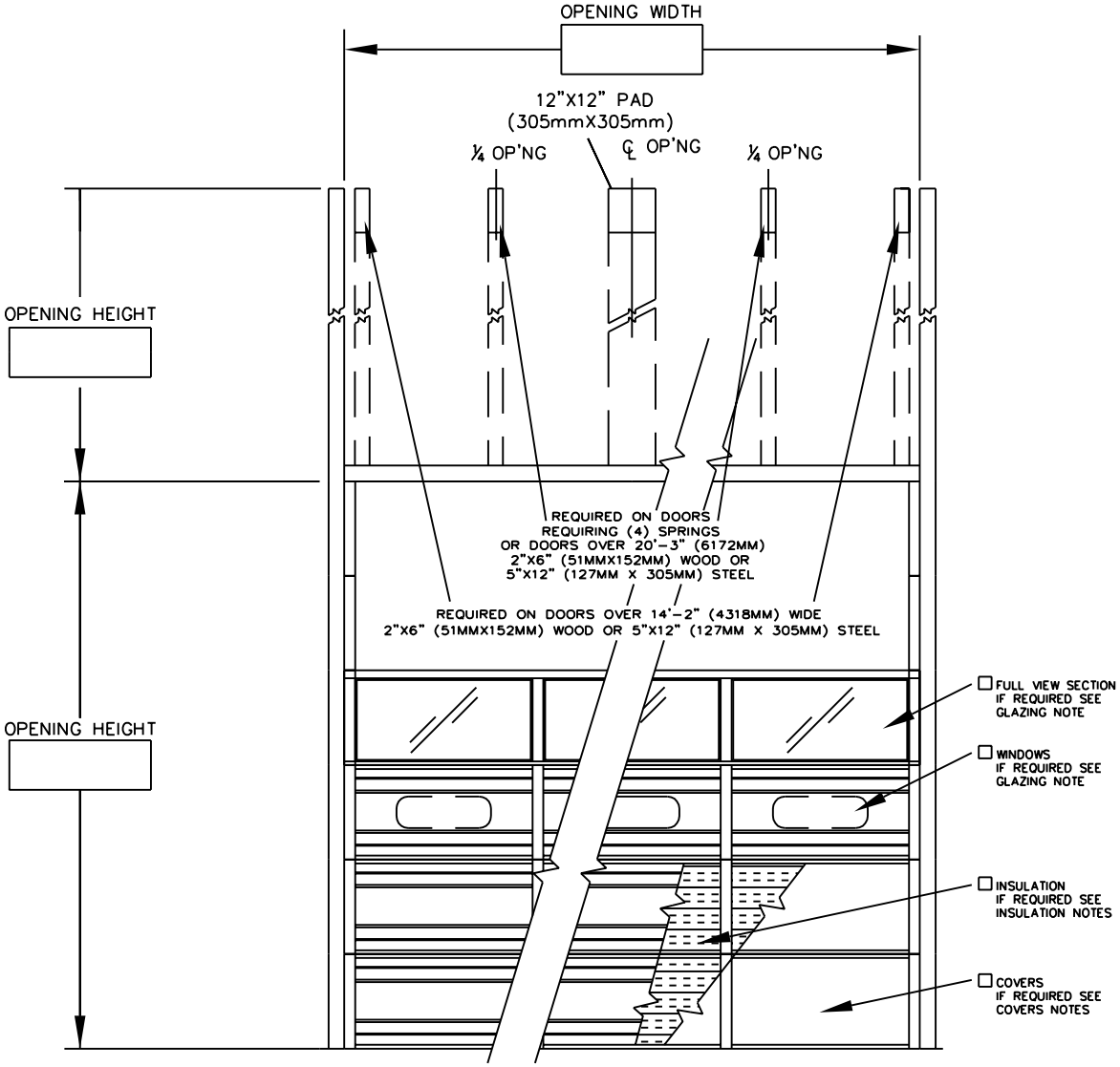

INTERIOR ELEVATION

1) DOORS SHALL BE STEEL SECTIONAL OVERHEAD TYPE RAYNOR SERIES ___ (S24 OR S20) AS MANUFACTURED BY RAYNOR GARAGE DOOR CO. DOOR SECTIONS – SECTIONS SHALL BE 2" (50.8MM) THICK, ROLLFORMED FORM ___ (24 OR 20) GA. COMMERCAL QUALITY HOT DIPPED GALVANIZED STEEL PER ASTM A-924 AND A-653. SECTIONS TO HAVE A SMOOTH EXTERIOR SURFACE WITH TWO DEEP RIBS AND FOUR PENCIL GROOVES FOR ADDED STRENGTH, ROLLFORMED TONGUE AND GROOVE JOINT BETWEEN SECTIONS FOR WEATHER-TITE CLOSURE. 13 GA. END STILES AND 16 GA. CENTER STILES, RIVETED TO EXTERIOR SURFACE WITH STAINLESS STEEL RIVETS AND RESISTANCE WELDED TO INTERIOR RAIL, SECTION PANEL SEALED AT END STILES WITH 1/4" (6.4MM) THICK POLYETHYLENE FOAM. FINISH- DOOR EXTERIOR TO HAVE FINISH COAT OF BAKED ON POLYESTER ___ (WHITE, BROWN, OR SEPIA) (BROWN & SEPIA AVAILABLE ON S24 ONLY) OVER AN EPOXY PRIMER. INTERIOR TO HAVE BAKED ON GREY POLYESTER ENAMEL. MAY BE FIELD PAINTED TO MATCH STRUCTURE.

☐ INSULATION- SECTIONS ARE INSULATED WITH 1 3/8" (34.9mm) THICK RIGID EXPANDED POLYSTYRENE INSULATION WITH FLAME RETARDANT ADDITIVE. INSULATION MEETS UL 723 TEST (ASTME-84) WITH MAXIMUM FLAME SPREADOF 25. "U" VALUE IS .130, "R" VALUE IS 7.70.

☐ INSULATION- SECTIONS ARE INSULATED WITH 1 3/4" (44.5mm) SEMI-RIGID FIBERGLASS. INSULATION MEETS UL TEST ASTME-84 AND FEDERAL SPECIFICATION HH-I-521E TYPE 1. "U" VALUE IS .132, "R" VALUE IS 7.57.

☐ INSULATION- SECTIONS ARE INSULATED WITH 1 3/8" (34.9mm) THICK RIGID EXPANDED POLYSTYRENE INSULATION. MEETS UL723 (ASTME-84) WITH A MAXIMUM FLAME SPREAD OF .25. INSULATION FACED WITH 0.015" (0.38mm) WHITE HAIRCELL TEXTURED HIGH-IMPACT POLYSTYRENE. R-VALUE= 7.70AND U-VALUE= 0.130. (COVERS NOT REQUIRED)

☐ SECTIONS FURNISHED WITH ___ (24, 20) GAUGE WHITE BAKED ON ENAMEL PAINTED COVERS, FITTING BETWEEN VERTICAL MULLIONS AND HORIZONTAL RAILS ON ALL SECTIONS.

☐ SECTIONS FURNISHED WITH ___ (26, 24, 20) GAUGE GREY BAKED ON ENAMEL PAINTED COVERS, FITTING BETWEEN VERTICAL MULLIONS AND HORIZONTAL RAILS ON ALL SECTIONS.

☐ SECTIONS FURNISHED WITH 1/8" (3.2mm) PRIME PAINTED HARDBOARD COVERS, FITTING BETWEEN VERTICAL MULLIONS AND HORIZONTAL RAILS ON ALL SECTIONS. NOT RECOMMENDED FOR HIGH HUMIDITY APPLICATIONS.

☐ GLAZED SECTIONS- SECTIONS SHALL BE RAYNOR SERIES "HL" MADE FROM 6063T6 EXTRUDED ALUMINUM STILE AND RAIL CONSTRUCTION. GLASS ENCASED IN SOFT VINYL CHANNELS AND HELD IN PLACE WITH SNAP-IN EXTRUDED ALUMINUM RETAINER.
FINISH- SECTIONS TO BE ENDURA COATED TO MATCH DOOR SECTIONS
FULL VIEW GLAZING (AS SHOWN)- _____ (DSB OR DSBT)

☐ GLAZING (AS SHOWN)- 24"(610MM)X8"(203MM)X ____ (1/8", 1/4", 5/8") RUBBER BY RAYNOR.

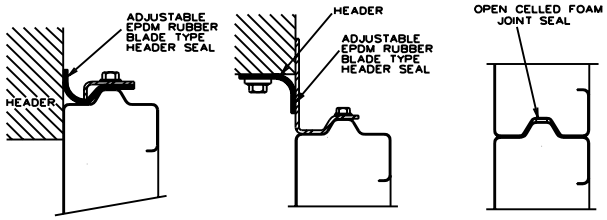

HEADER SEAL ☐ | HEADER SEAL ☐ | SECTION JOINT SEAL ☐

DOOR NUMBER	QTY	OPENING		ACTUAL		MODEL	JAMB			MOUNTING		LOCK	PANELS WIDE	PANELS HIGH	SECTION NUMBER OPEN FOR GLASS							
		WIDTH	HEIGHT	WIDTH	HEIGHT		W	S	M	ANGLE	BRKT				1	2	3	4	5	6	7	8

JOB:

DISTR:

CONTR:

ARCH:

RAYNOR

NR:2902522

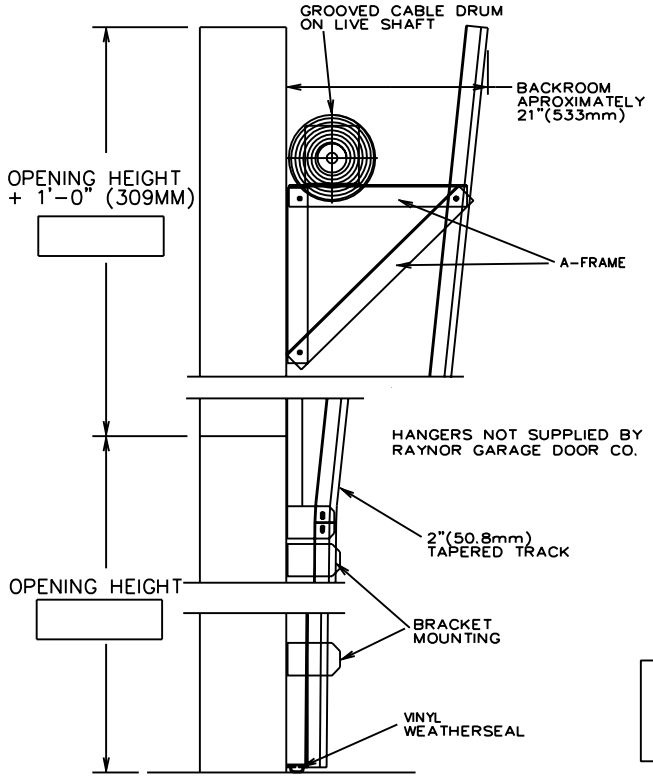

SECTION THRU OPENING

ANSI/UL325 REQUIRES THE MOTOR OPERATOR BE MOUNTED A MINIMUM OF 8' ABOVE THE FLOOR OR GUARDING OF THE MOTOR OPERATOR TO PREVENT INJURY.(GUARDS BY OTHERS).

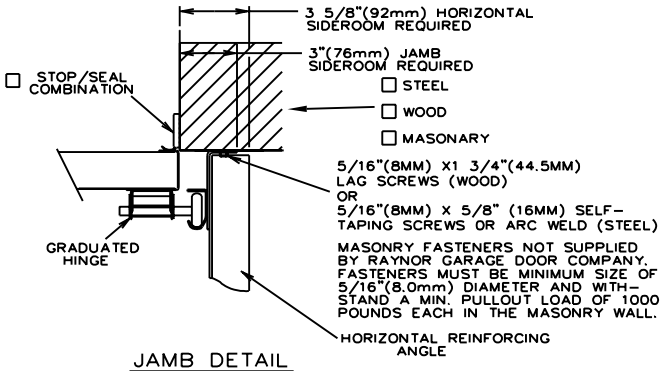

JAMB DETAIL

TRACKS- 2" (50.8mm) HOT-DIPPED GALVANIZED TRACK, PER ASTM A-653, TO BE BRACKET MOUNTED AND FULLY ADJUSTABLE FOR SEALING DOOR TO JAMB. HORIZONTAL TRACK TO BE ADEQUETLY REINFORCED WITH CONTINUOUS ANGLE.

HARDWARE- HINGES AND BRACKETS MADE FROM GALVANIZED STEEL. TRACK ROLLERS SHALL HAVE TEN 1/4" (6.4mm) DIAMETER HARDENED STEEL BALLS PER ROLLER.

SPRING COUNTERBALANCE- HEAVY DUTY OIL-TEMPERED WIRE TORSION SPRINGS ON A CONTINUOUS BALL BEARING CROSS-HEADER SHAFT. GALVANIZED AIRCRAFT TYPE LIFTING CABLES WITH MIN. SAFETY FACTOR OF 5 TO 1.

- ☐ LOCKING - CREMONE TYPE BOLT ENGAGES SLOT IN TRACK, _____ HAND SIDE. FIVE PIN TUMBLER CYLINDER OUTSIDE - NIGHT LATCH INSIDE.
- ☐ LOCKING - SPRING LOADED SLIDE BOLT ENGAGES SLOT IN TRACK. OPERABLE FROM INSIDE ONLY - MAY BE MOUNTED EITHER SIDE
- ☐ LOCKING - OMIT LOCK.

LOCKS SHOULD NOT BE SUPPLIED WITH AN ELECTRIC OPERATED DOOR WITHOUT A LOCK INTERLOCK SWITCH.

- ☐ RAYNOR POWERHOIST BASIC (PHBJR) 1/2 H.P., 115 VOLT, SINGLE PHASE
- ☐ RAYNOR POWERHOIST BASIC (PHBHR) 1/2 H.P., 115 VOLT, SINGLE PHASE
- ☐ RAYNOR POWERHOIST BASIC (PHBJ) 1/2 H.P., 115 VOLT, SINGLE PHASE
- ☐ RAYNOR POWERHOIST BASIC (PHBJH) 1/2 H.P., 115 VOLT, SINGLE PHASE
- ☐ RAYNOR POWERHOIST STANDARD (RBJ) ___ H.P., ___ VOLT, ____ PHASE
- ☐ RAYNOR POWERHOIST STANDARD (RBJH) ___ H.P., ___ VOLT, ____ PHASE
- ☐ RAYNOR POWERHOIST OPTIMA (RGJH) ___ H.P., ___ VOLT, ____ PHASE
- ☐ WIRING TYPE-SR2 WIRING, MOMENTARY CONTACT OPEN/CLOSE/STOP. SAFETY EDGE TO REVERSE.
- ☐ WIRING TYPE-SPECIAL (NOT AVAILABLE WITH PHBT OPERATORS) SPECIFY SPECIAL WIRING TYPE _____
- ☐ PNEUMATIC SAFETY EDGE TO REVERSE
- ☐ ELECTRIC SAFETY EDGE TO REVERSE
- ☐ THRU-BEAM PHOTO EYES

☐ COIL CORD OR ☐ CABLE TAKE UP REEL

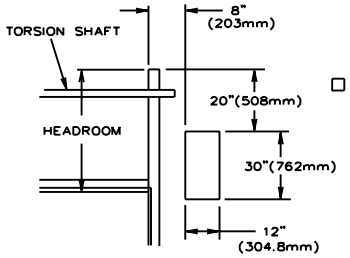

JACKSHAFT MOUNTING DETAIL

POSITION # ____ REQUIRED

(TYPICAL DIMENSIONS)

RAYNOR DOES NOT RECOMMEND THE USE OF A JACKSHAFT OPERATOR ON DOORS WITH LESS THAN OR EQUAL TO 30"(762MM) OF HEADROOM. RAYNOR RECOMMENDS THE USE OF A TROLLEY TYPE OPERATOR IN THESE SITUATIONS.